Overview

- The RT701/RT702 is a 5V power supply chip designed to provide circuit initialization and timing monitoring functions for DSP and processor-based systems, with an ultra-low power consumption as low as 50μA。
- The RT701/RT702 includes three reset functions: Voltage Detection Reset, Watchdog Timer Reset, and Manual Reset。
- The RT701/RT702 series offers various package types, multiple reset timeout periods, and multiple reset threshold voltages. It operates reliably within a temperature range of -40°C to 85°C。

Features

- **Supply Voltage**: 5V
- **Ultra-Low Power Consumption**: 50μA
- **Versatility**: 4 types of reset timeout periods and 4 types of reset threshold voltages
- **Manual Reset Function**: Integrated
- **Package Options**: SOT23-5 and SOT23-6
- **Compatibility**: Pin-to-pin replacement for the **TPS382X** series

Applications

- Industrial Equipment
- Programmable Controllers
- Smart Instrumentation
- Wireless Communication Systems
- Portable and Battery-Powered Devices
- DSP / MCU Systems

Pin Configurations

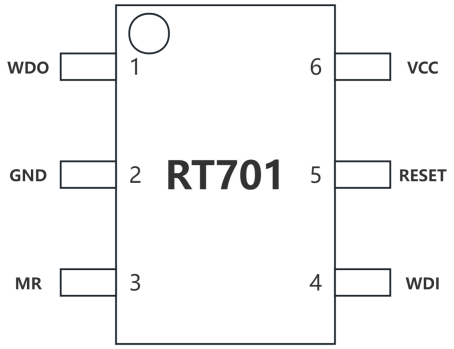

SOT23-6

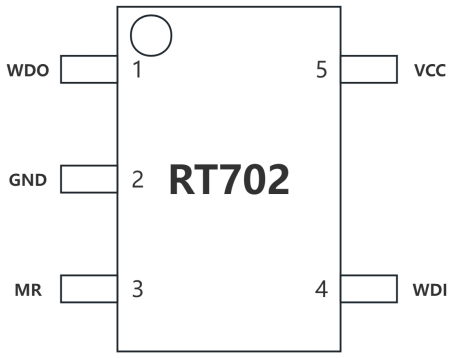

SOT23-5

Pin Definitions

Pin	Symbol	Function	Attribute
1	WDO	Watchdog Output	O
2	GND	Ground	
3	MR	Manual Reset Input	I
4	WDI	Watchdog Input	I
5	RESET	Reset Output	
6	VCC	Power Supply	I/O

Model Selection

RT701/702	Reset Timeout (1st Digit)	Reset Threshold Voltage (2nd Digit)
S	1.6s	2.8V
M	12.8s	3.5V
L	25.6s	4.0V
X	51.2s	4.5V

Example: RT702SS represents a SOT23-5 package with a 1.6s reset timeout and a 2.8V reset threshold voltage.

Absolute Maximum Ratings

Unless otherwise specified, T_{amb}= 25℃

Parameter Name	Symbol	Range	Unit
Supply Voltage	V_{DD}	-0.3~7	V
Input/Output Voltage Limits	V_{IN}/V_{OUT}	GND-0.3~V_{DD}+0.3	V
Operating Ambient Temperature	T_{amb}	-40~85	℃
Storage Temperature	T_{stg}	-65~150	℃

Electrical Characteristics

Unless otherwise specified, V_{DD}=5V±5%, T_{amb}= 25℃

PARAMETER		CONDITIONS	MIN	TYP	MAX	UNITS
Operating Voltage Range (V_{CC})			1.0		5.5	V
Supply Current (I_{SUPPLY})				50	150	μA
Reset Threshold (V_{RT})		S		2.8		V
		M		3.5		
		L		4.0		
		X		4.5		
Reset Threshold Hysteresis				20		mV
Reset Pulse Width (t_{RS})			120	200	280	ms
$\overline{\text{RESET}}$ Output Voltage		I_{SOURCE} = 800μA	V_{CC} - 1.5			V
		I_{sink} = 3.2mA			0.4	
		V_{CC} = 1V, I_{sink} = 50μA			0.3	
Watchdog Timeout Period (t_{WD})		S		1.6		sec
		M		12.8		
		L		25.6		
		X		51.2		
WDI Pulse Width (t_{WP})		V_{IL} = 0.4V, V_{IH} = V_{CC}	70	250		ns
WDI Input Threshold	Low	V_{CC} = 5V			0.8	V
	High	V_{CC} = 5V	3.5			
	Low	$V_{RST(MAX)}$ < V_{CC} < 3.6V			0.8	
	High	$V_{RST(MAX)}$ < V_{CC} < 3.6V	0.7 × V_{CC}			
WDI Input Current		WDI = V_{CC}		50	150	μA
		WDI = 0V	-150	-50		
$\overline{\text{WDO}}$ Output Voltage		I_{SOURCE} = 800μA	V_{CC} - 1.5			V
		I_{sink} = 1.2mA			0.4	
$\overline{\text{MR}}$ Pull-Up Current		$\overline{\text{MR}}$ = 0V	100		600	μA
$\overline{\text{MR}}$ Pulse Width (t_{MR})			250			ns
$\overline{\text{MR}}$ Input Threshold	Low	T_A = +25℃			0.8	V
	High		2			
$\overline{\text{MR}}$ to Reset Out Delay (t_{MD})					350	ns

Characteristic Waveforms

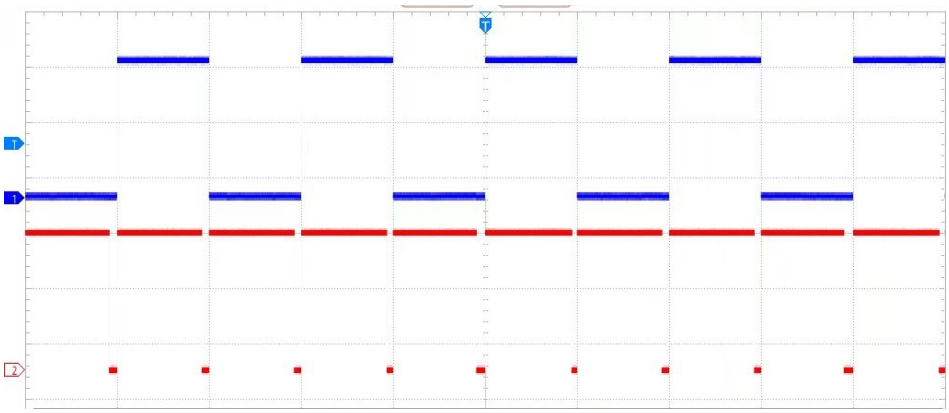

Figure 1 Watchdog Timing

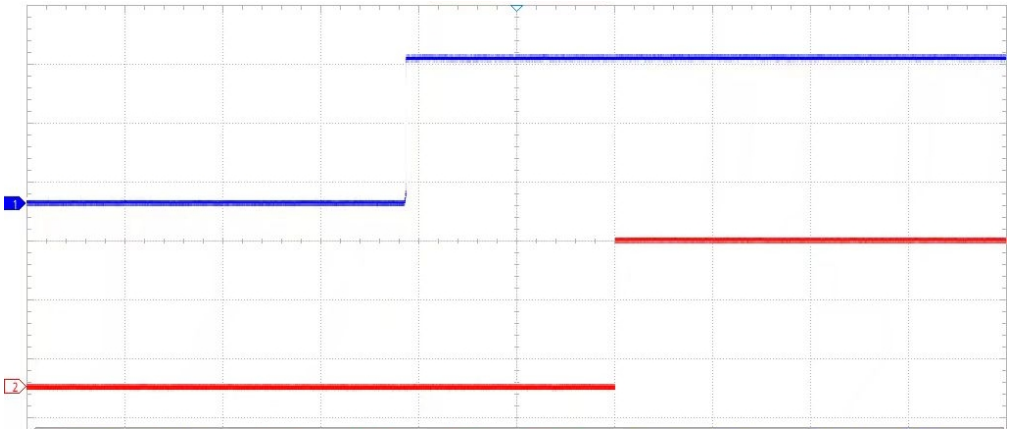

Figure 2 Resst Timing

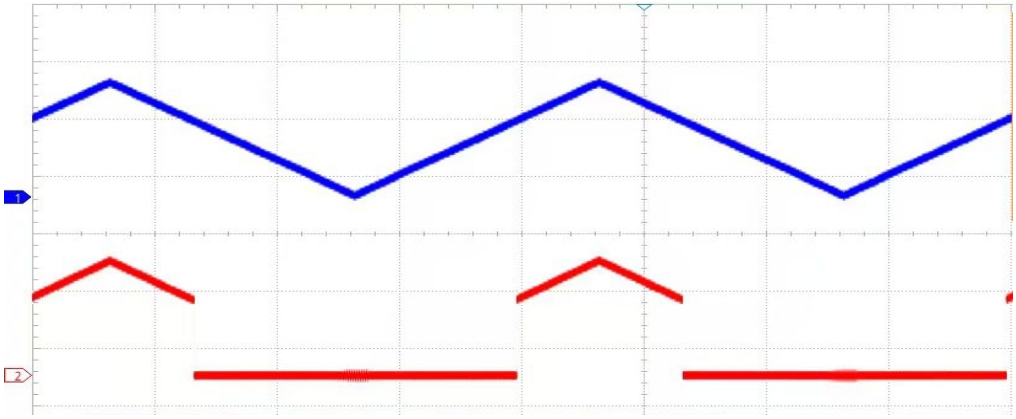

Figure 3 Reset Output VS Supply Voltage

Detailed Functional Description

◆ Reset Output Function

When the monitored voltage VCC is higher than 1.2V, the RESET pin remains active (outputting a logic-low reset signal) until the monitored voltage rises above the threshold voltage. Approximately 200ms after exceeding the threshold, the reset state ends and the pin outputs a logic-high signal.

◆ Manual Reset Function

The MR pin is an active-low manual reset input. It is kept at a high level via an internal 10kΩ pull-up resistor. This pin can be pulled low by CMOS/TTL logic signals or a mechanical switch (integrated de-bounce circuitry filters out switch jitters).

- When MR is low, the Reset pin outputs a reset signal.
- After MR returns to a high level for 200ms, the reset signal is terminated.

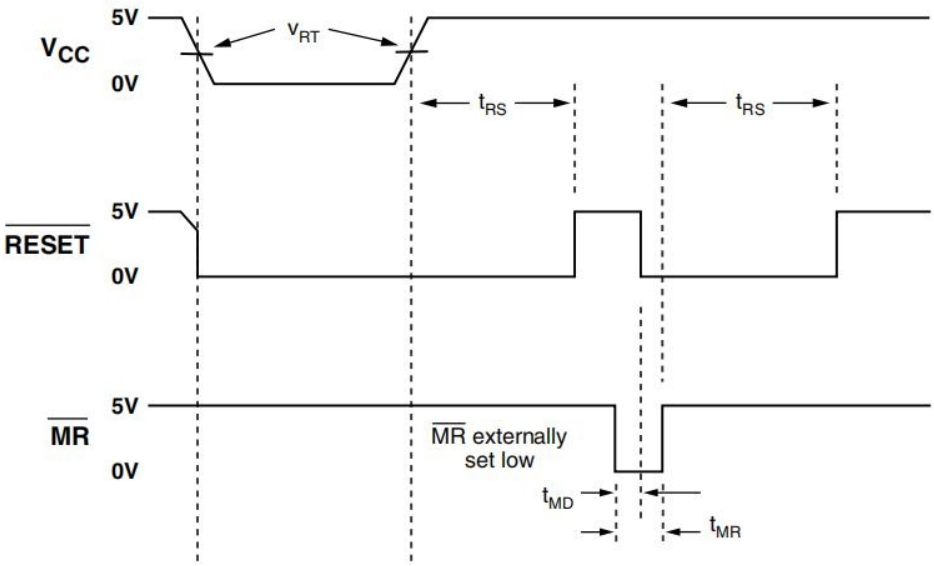

◆ Watchdog Function

The chip integrates a watchdog counter. If the WDI pin does not detect a high-to-low or low-to-high transition within the watchdog timeout period, a reset signal is triggered.

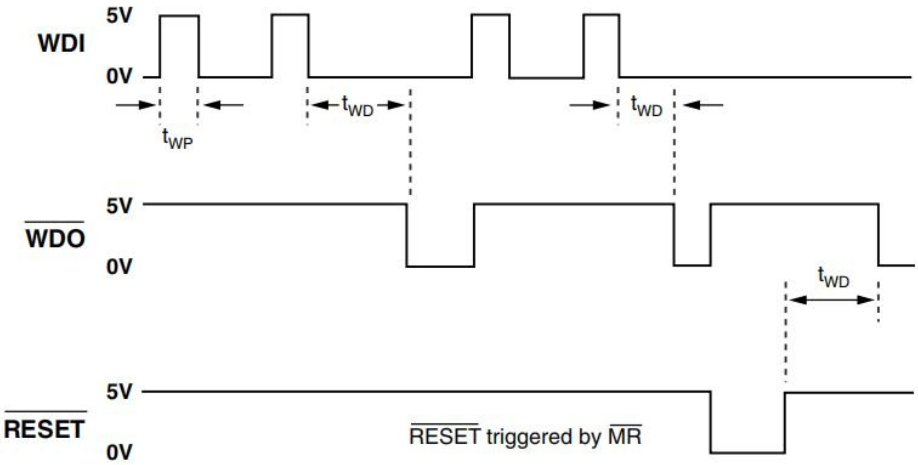

Package Information

◆ RT701

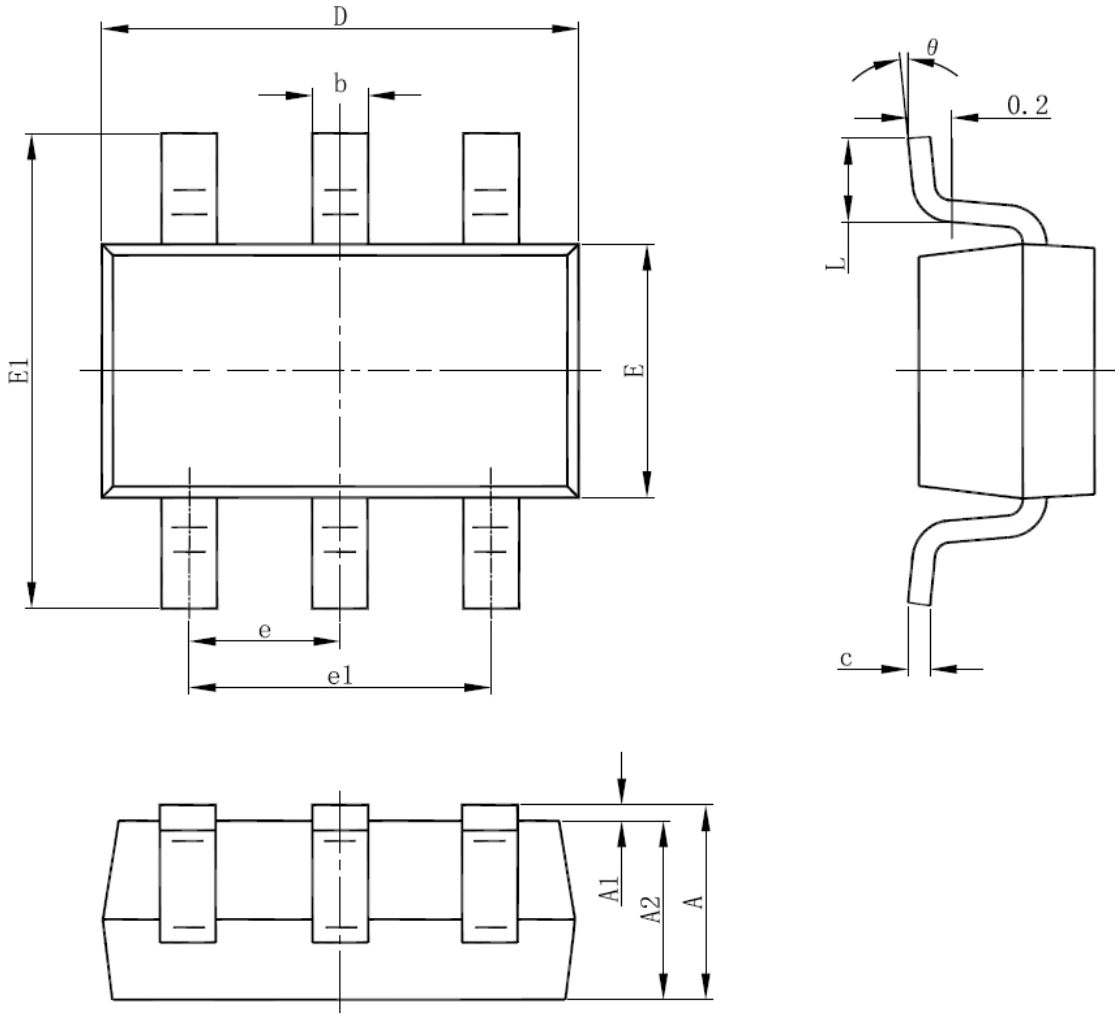

Dimension	Millimeter		Inch	
	Minimum	Maximum	Minimum	Maximum
A	1.050	1.250	0.041	0.049
A1	0.000	0.100	0.000	0.004
A2	1.050	1.150	0.041	0.045
b	0.300	0.500	0.012	0.020
c	0.100	0.200	0.004	0.008
D	2.820	3.020	0.111	0.119
E	1.500	1.700	0.059	0.067
E1	2.650	2.950	0.104	0.116
e	0.950(BSC)		0.037(BSC)	
e1	1.800	2.000	0.071	0.079
L	0.300	0.600	0.012	0.024
θ	0°	8°	0°	8°

◆ RT702

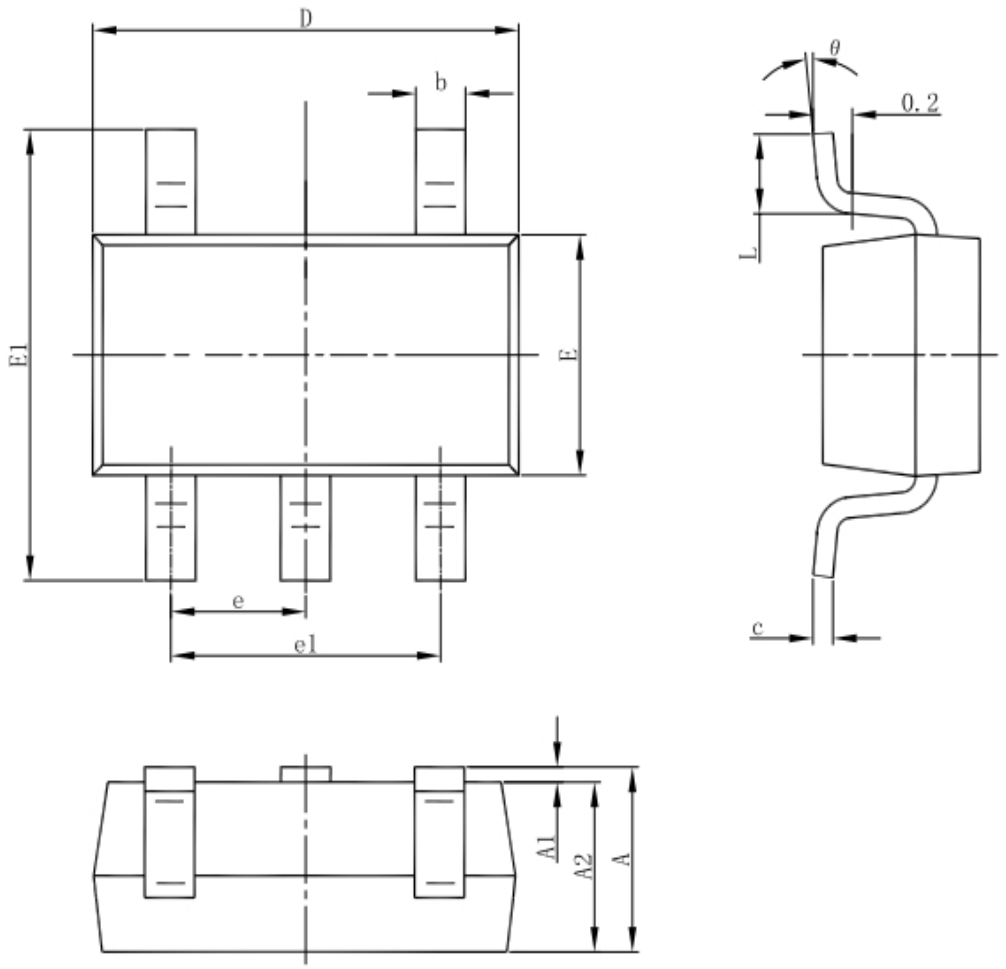

Dimension	Millimeter		Inch	
	Minimum	Maximum	Minimum	Maximum
A	1.050	1.250	0.041	0.049
A1	0.000	0.100	0.000	0.004
A2	1.050	1.150	0.041	0.045
b	0.300	0.500	0.012	0.020
c	0.100	0.200	0.004	0.008
D	2.820	3.020	0.111	0.119
E	1.500	1.700	0.059	0.067
E1	2.650	2.950	0.104	0.116
e	0.950(BSC)		0.037(BSC)	
e1	1.800	2.000	0.071	0.079
L	0.300	0.600	0.012	0.024
θ	0°	8°	0°	8°